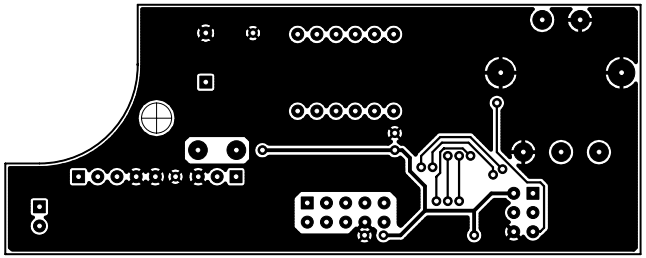

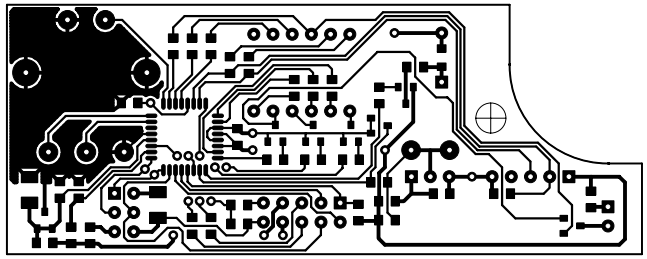

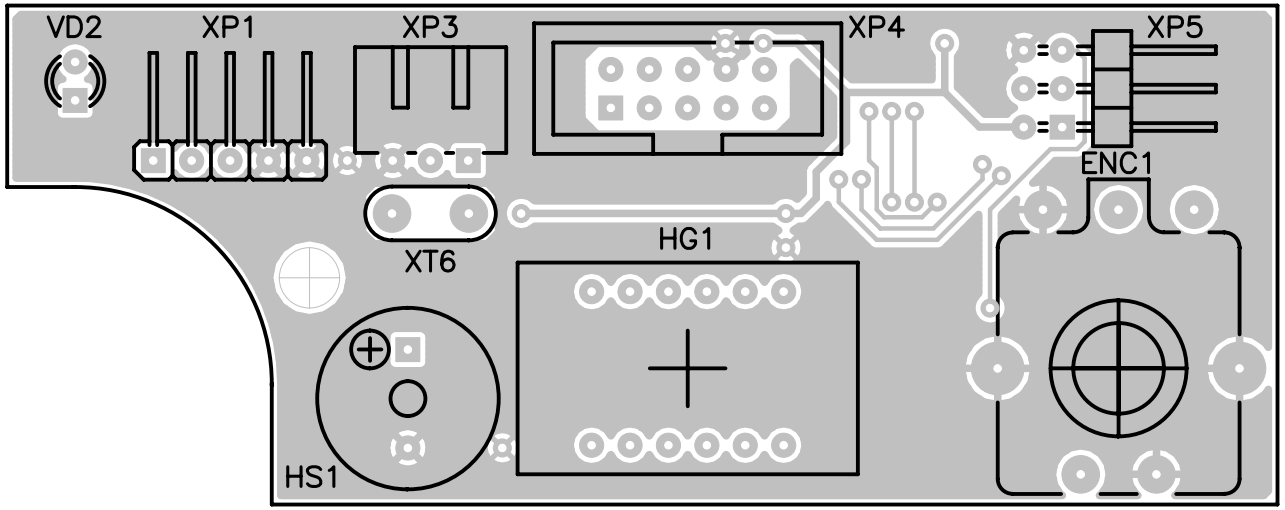
VD2
XP1
XP3
XP4
XP5
ENC1
XT6
HG1
HS1

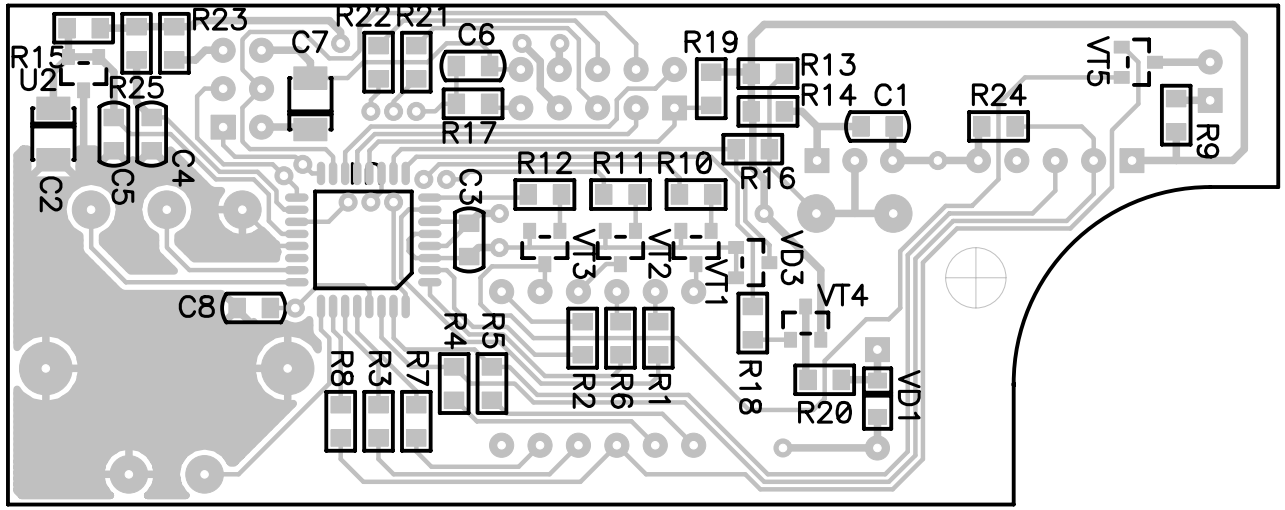
R23
R22
R21
C6
R15
U2
R25
C7
R19
R13
R14
C1
R24
VT5
R9
R17
C2
C5
C4
R12
R11
R10
R16
C3
VT3
VT2
VT1
VD3
VT4
C8
R4
R5
R8
R3
R7
R2
R6
R1
R18
R20
VD1

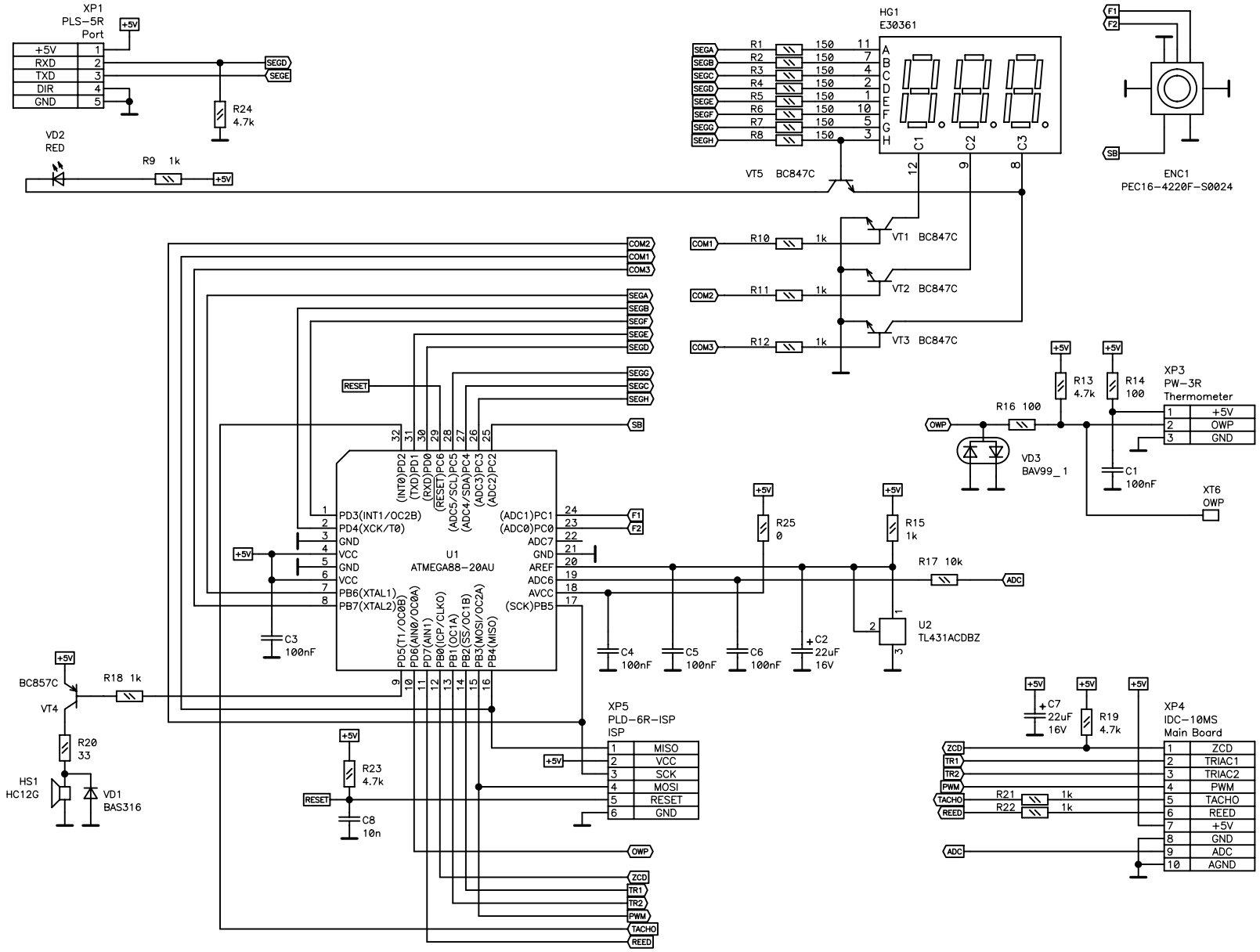

Company Name	NSM lab	
Size A35	Title DFS-90 (panel)	Rev A
Date Wed Dec 01, 2010		Drawn by NSM lab
Filename DFS-90_ Panel_ 4.sch		Sheet 1 of 1