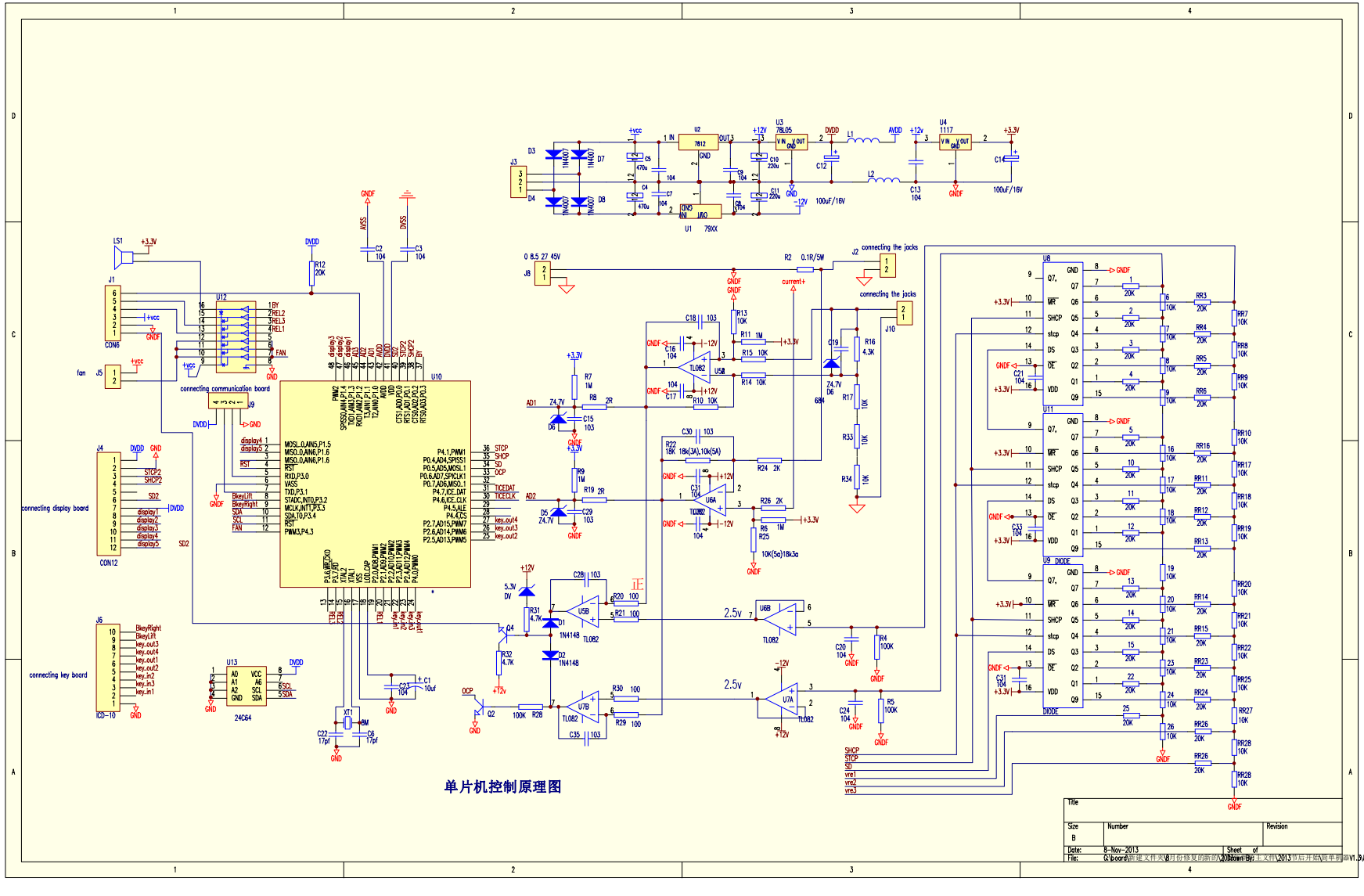
U10
U12
U9
U13
24C64
U1
79XX
U2
7812
U3
78L05
U4
1117
U8
U11
U9 DIODE
DIODE
connecting communication board
connecting display board
connecting key board
connecting the jacks
current+
2.5V
100uF/16V
Title
Size
B
Number
Revision
Date: 8-Nov-2013
Sheet of
File: G:\pcard\新建文件夹\8月份修复的部分\2013\Draw\BP主文件\2013节后开始\简单机器板V1.3\word001.ddb
Drawn By: 简单机器板1.2.DDB

单片机控制原理图