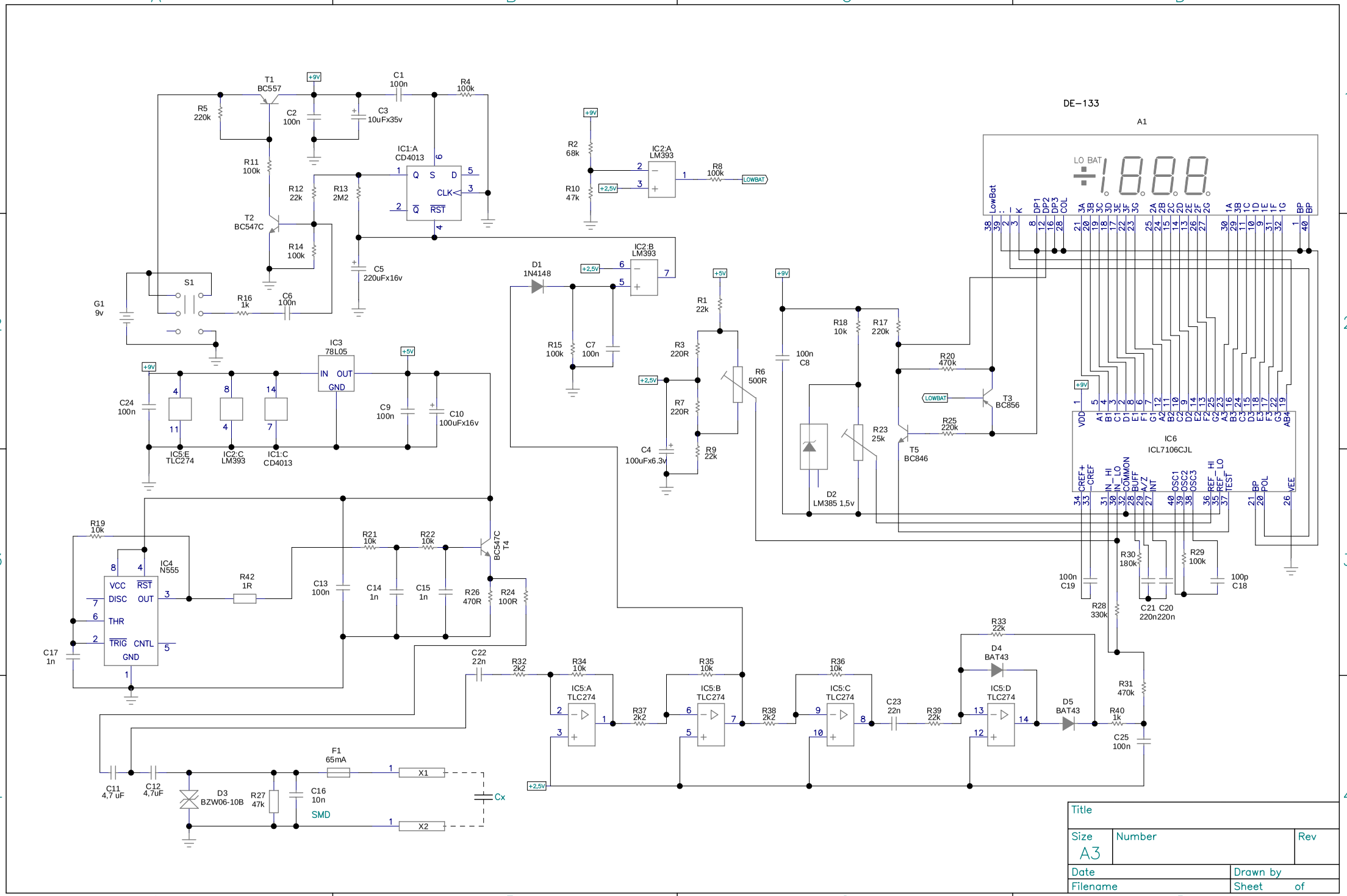
DE-133
A1
LO BAT
T1 BC557
T2 BC547C
R5 220k
R11 100k
R12 22k
R13 2M2
R14 100k
R16 1k
C1 100n
C2 100n
C3 10uFx35v
R4 100k
C5 220uFx16v
C6 100n
S1
G1 9v
IC1:A CD4013
IC2:A LM393
IC2:B LM393
R2 68k
R10 47k
R8 100k
LOWBAT
D1 1N4148
R15 100k
C7 100n
IC3 78L05
IN OUT GND
C24 100n
C9 100n
C10 100uFx16v
IC5:E TLC274
IC2:C LM393
IC1:C CD4013
R1 22k
R3 220R
R6 500R
R7 220R
C4 100uFx6.3v
R9 22k
R18 10k
R17 220k
R20 470k
T3 BC856
R25 220k
T5 BC846
R23 25k
100n C8
D2 LM385 1,5v
IC6 ICL7106CJL
R30 180k
R29 100k
100n C19
100p C18
R28 330k
C21 220n
C20 220n
R19 10k
IC4 N555
VCC RST DISC OUT THR TRIG CNTL GND
C17 1n
R42 1R
C13 100n
R21 10k
R22 10k
C14 1n
C15 1n
R26 470R
R24 100R
BC547C T4
C22 22n
R32 2k2
R34 10k
IC5:A TLC274
R37 2k2
R35 10k
IC5:B TLC274
R38 2k2
R36 10k
IC5:C TLC274
C23 22n
R39 22k
R33 22k
D4 BAT43
IC5:D TLC274
D5 BAT43
R31 470k
R40 1k
C25 100n
C11 4,7 uF
C12 4,7uF
D3 BZW06-10B
R27 47k
F1 65mA
C16 10n
SMD
X1
X2
Cx
Title
Size A3
Number
Rev
Date
Drawn by
Filename
Sheet of