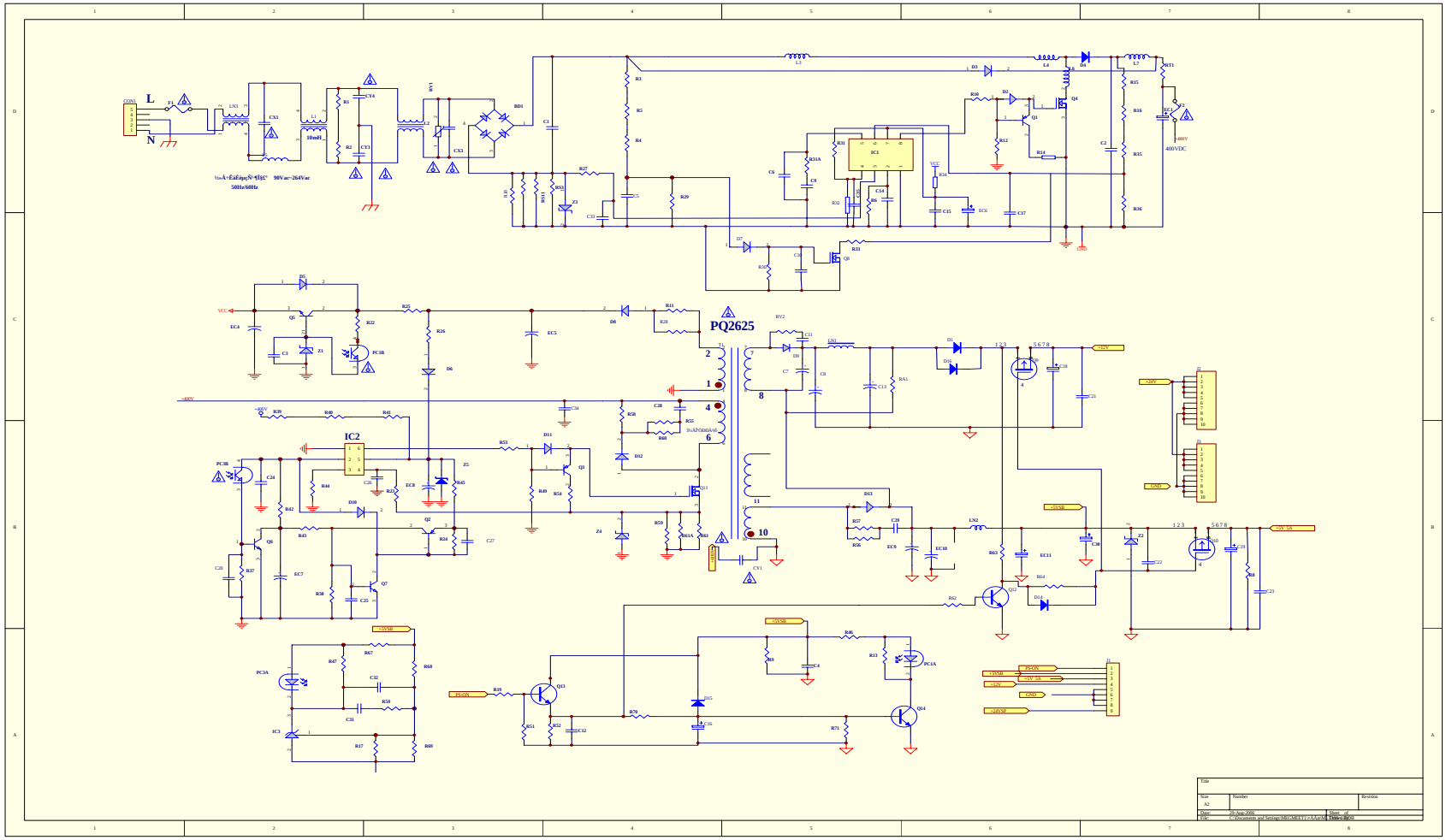

Title			
Size: A2	Number:		Revision:
Date: 30-Jun-2006		Sheet of	
File: C:\Documents and Settings\MEGABIT\Desktop\			

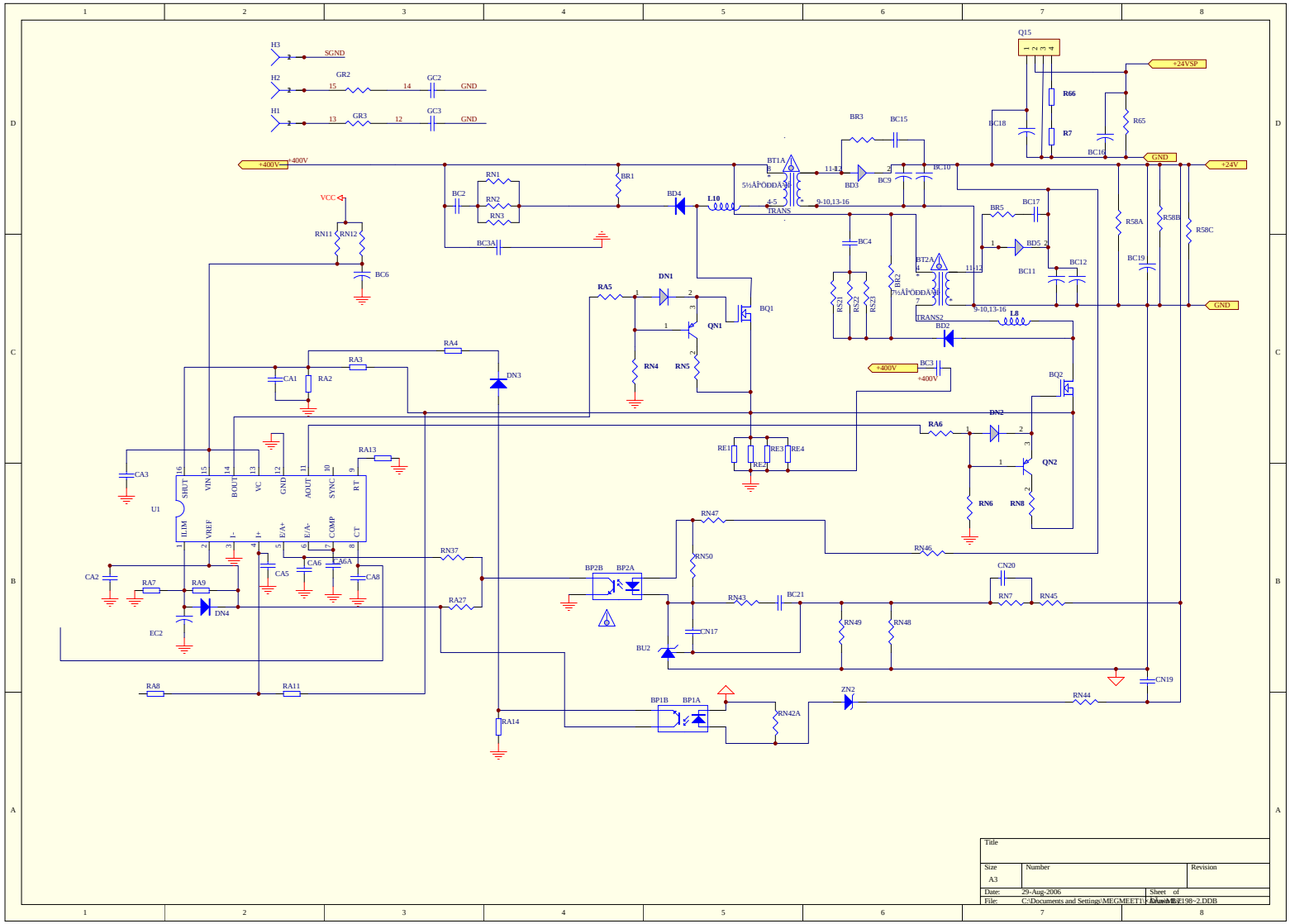

Title			
Size A3	Number		Revision
Date: 29-Aug-2006		Sheet of	
File: C:\Documents and Settings\MEG\MEET1\Kaiwan\EF19B~2.DDB		Drawn By:	