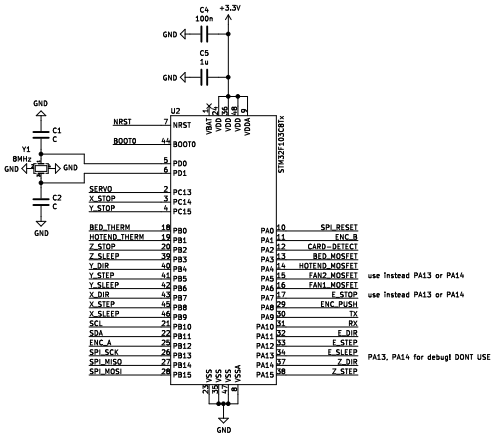


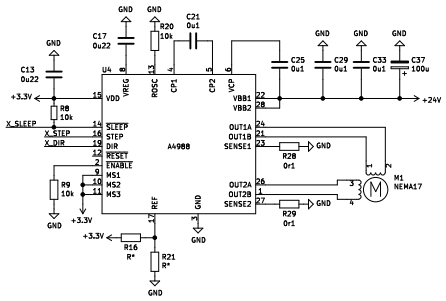


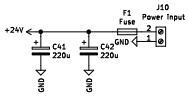


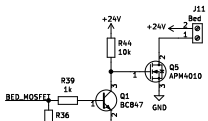


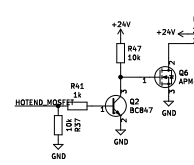


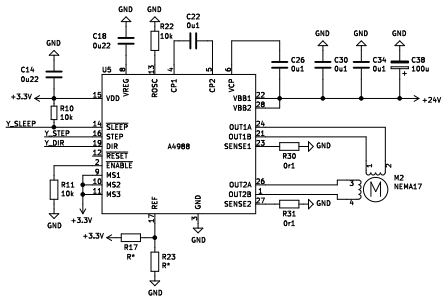


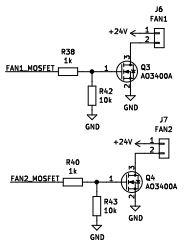


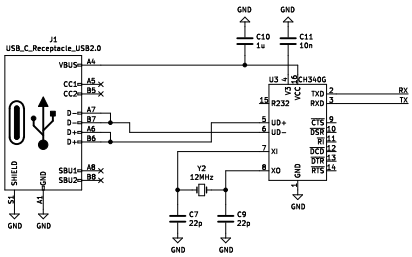


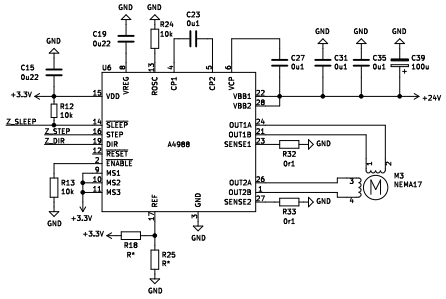


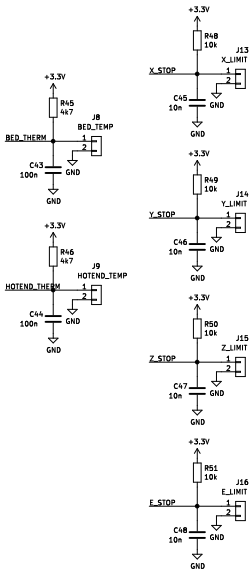


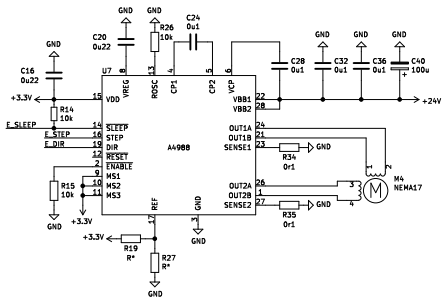


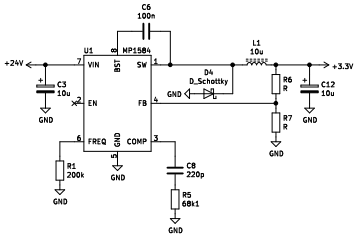


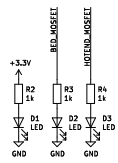


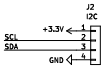

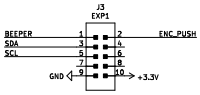


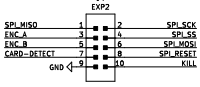

Sheet: /
File: delete.sch

**Title:**

| | | |
|---|---|---|
| Size: A2 | Date: 2021-09-17 | Rev: |
| KiCad E.D.A. eeschema (5.1.9)-1 | | Id: 1/1 |