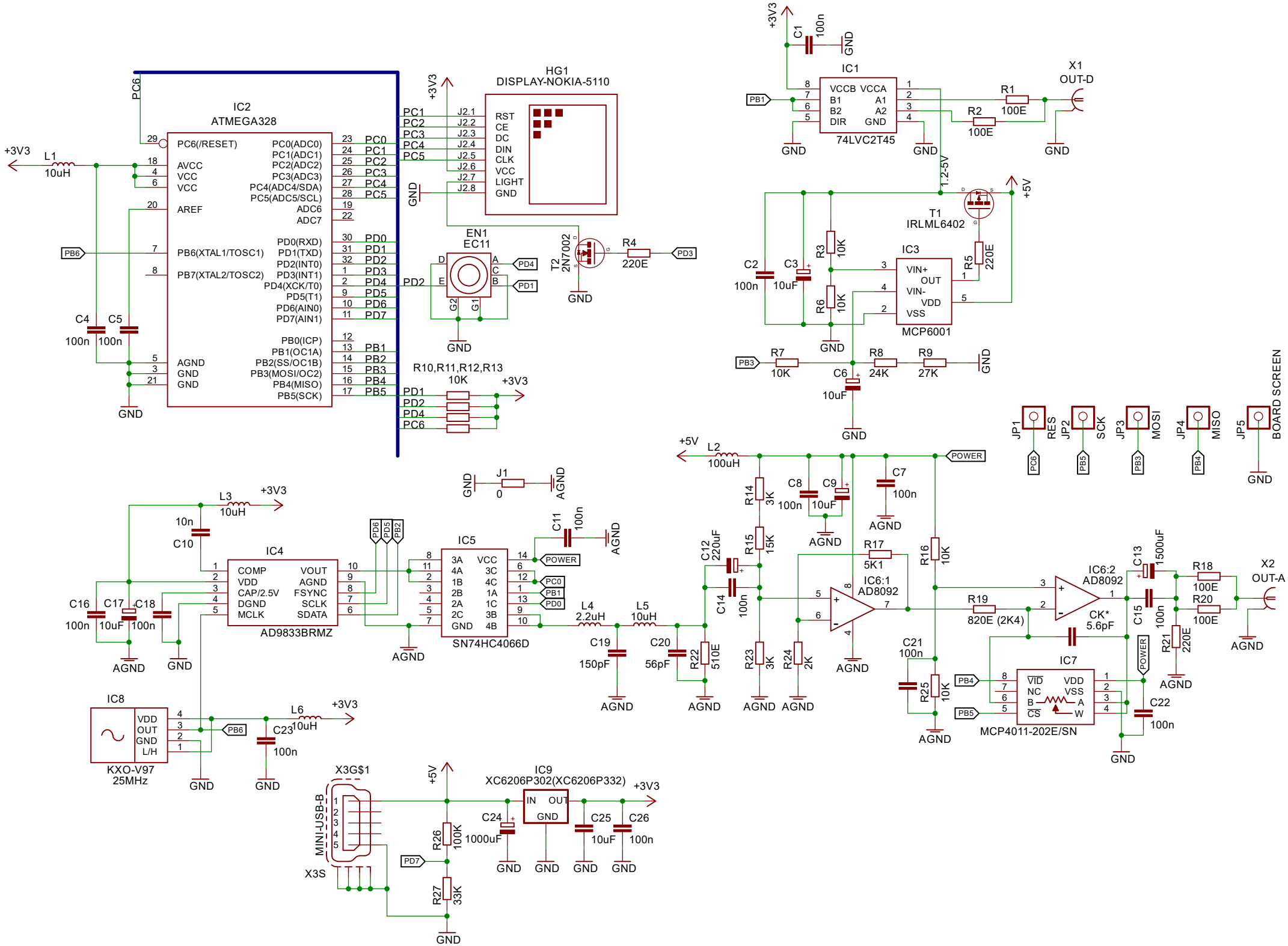
IC2
ATMEGA328
PC6(/RESET)
AVCC
VCC
VCC
AREF
PB6(XTAL1/TOSC1)
PB7(XTAL2/TOSC2)
AGND
GND
GND
PC0(ADC0)
PC1(ADC1)
PC2(ADC2)
PC3(ADC3)
PC4(ADC4/SDA)
PC5(ADC5/SCL)
ADC6
ADC7
PD0(RXD)
PD1(TXD)
PD2(INT0)
PD3(INT1)
PD4(XCK/T0)
PD5(T1)
PD6(AIN0)
PD7(AIN1)
PB0(ICP)
PB1(OC1A)
PB2(SS/OC1B)
PB3(MOSI/OC2)
PB4(MISO)
PB5(SCK)
+3V3
L1
10uH
C4
C5
100n
100n
HG1
DISPLAY-NOKIA-5110
RST
CE
DC
DIN
CLK
VCC
LIGHT
GND
EN1
EC11
T2
2N7002
R4
220E
R10,R11,R12,R13
10K
IC1
74LVC2T45
VCCB
VCCA
B1
A1
B2
A2
DIR
GND
X1
OUT-D
R1
100E
R2
100E
C1
100n
1.2-5V
+5V
T1
IRLML6402
IC3
MCP6001
VIN+
OUT
VIN-
VDD
VSS
C2
100n
C3
10uF
R3
10K
R6
10K
R5
220E
R7
10K
R8
24K
R9
27K
C6
10uF
JP1
RES
JP2
SCK
JP3
MOSI
JP4
MISO
JP5
BOARD SCREEN
L2
100uH
POWER
C7
100n
C8
100n
C9
10uF
R14
3K
R15
15K
R16
10K
R17
5K1
IC6:1
AD8092
IC6:2
AD8092
R19
820E (2K4)
CK*
5.6pF
C13
1500uF
C15
100n
R18
100E
R20
100E
R21
220E
X2
OUT-A
C12
220uF
C14
100n
R23
3K
R24
2K
C21
100n
R25
10K
IC7
MCP4011-202E/SN
VID
VDD
NC
VSS
B
A
CS
W
C22
100n
J1
0
L3
10uH
10n
C10
IC4
AD9833BRMZ
COMP
VDD
CAP/2.5V
DGND
MCLK
VOUT
AGND
FSYNC
SCLK
SDATA
C16
100n
C17
10uF
C18
100n
IC5
SN74HC4066D
3A
4A
1B
2B
2A
2C
GND
VCC
3C
4C
1A
1C
3B
4B
C11
100n
L4
2.2uH
L5
10uH
C19
150pF
C20
56pF
R22
510E
IC8
KXO-V97
25MHz
VDD
OUT
GND
L/H
L6
10uH
C23
100n
X3G$1
MINI-USB-B
X3S
IC9
XC6206P302(XC6206P332)
IN
OUT
GND
C24
1000uF
C25
10uF
C26
100n
R26
100K
R27
33K
PD7