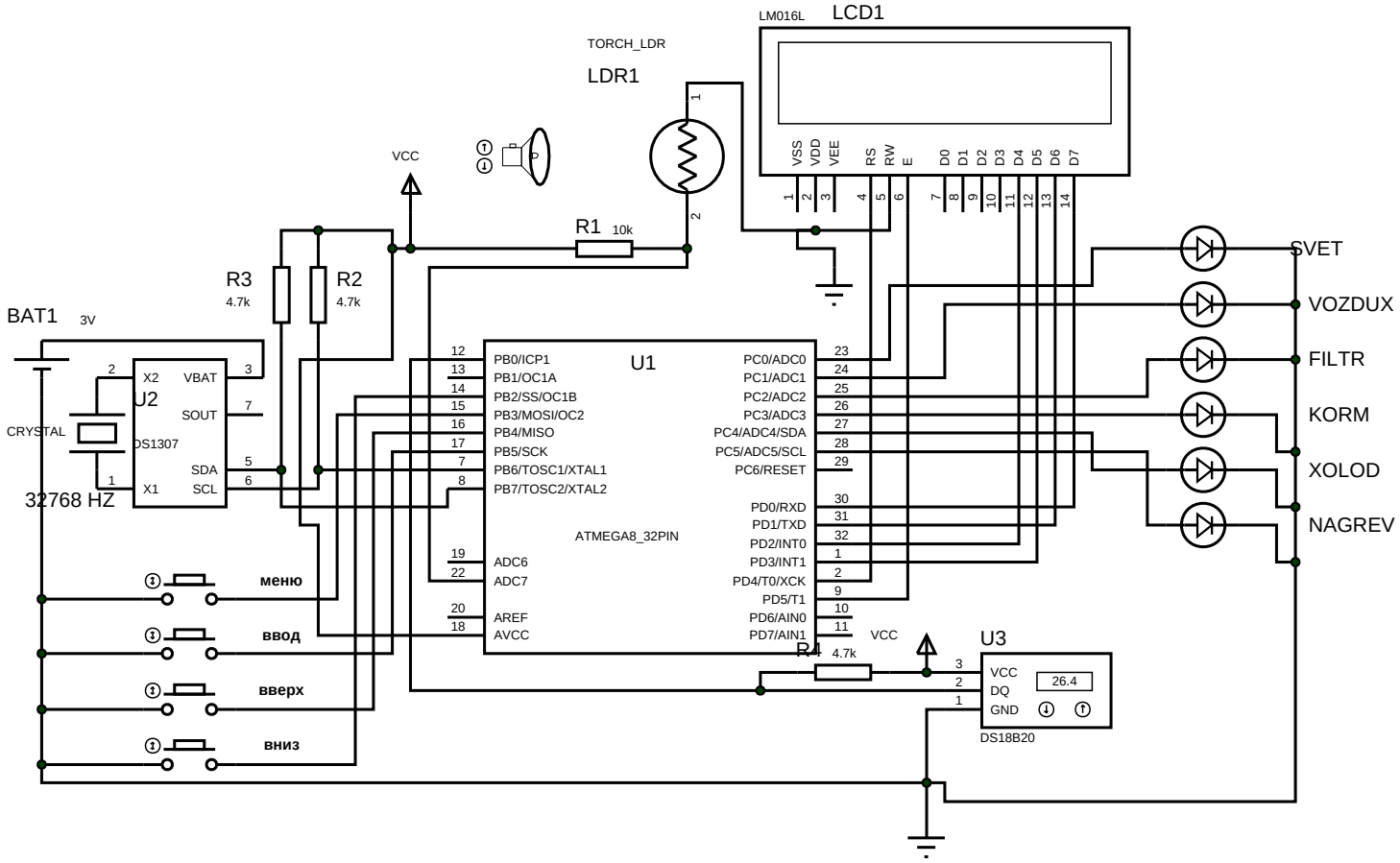
LM016L
LCD1
TORCH_LDR
LDR1
VCC
R1
10k
R3
4.7k
R2
4.7k
BAT1
3V
CRYSTAL
32768 HZ
U2
DS1307
X2
X1
VBAT
SOUT
SDA
SCL
U1
ATMEGA8_32PIN
PB0/ICP1
PB1/OC1A
PB2/SS/OC1B
PB3/MOSI/OC2
PB4/MISO
PB5/SCK
PB6/TOSC1/XTAL1
PB7/TOSC2/XTAL2
ADC6
ADC7
AREF
AVCC
PC0/ADC0
PC1/ADC1
PC2/ADC2
PC3/ADC3
PC4/ADC4/SDA
PC5/ADC5/SCL
PC6/RESET
PD0/RXD
PD1/TXD
PD2/INT0
PD3/INT1
PD4/T0/XCK
PD5/T1
PD6/AIN0
PD7/AIN1
VSS
VDD
VEE
RS
RW
E
D0
D1
D2
D3
D4
D5
D6
D7
SVET
VOZDUX
FILTR
KORM
XOLOD
NAGREV
меню
ввод
вверх
вниз
R4
4.7k
VCC
U3
VCC
DQ
GND
26.4
DS18B20