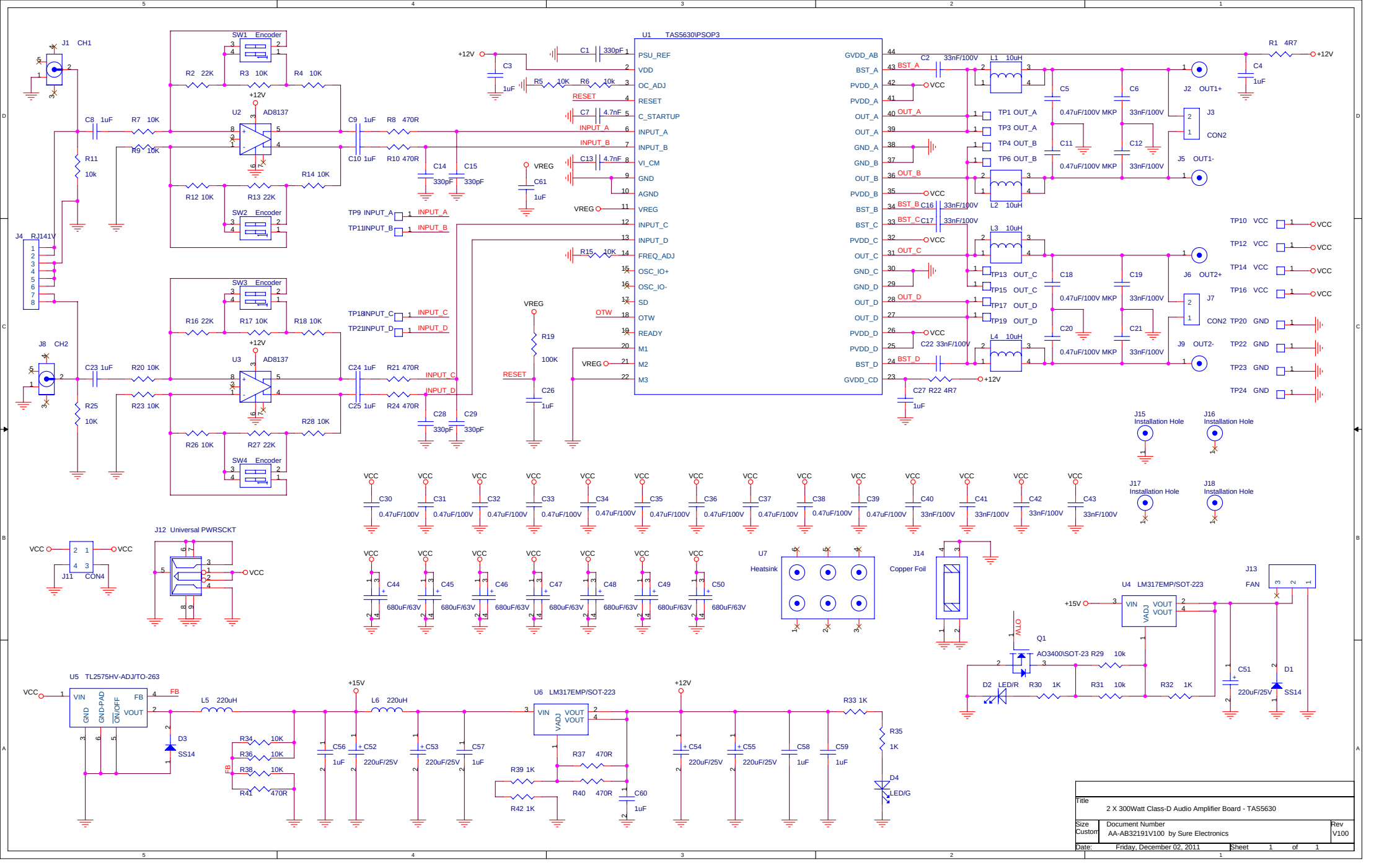
U1 TAS5630\PSOP3
PSU_REF
VDD
OC_ADJ
RESET
C_STARTUP
INPUT_A
INPUT_B
VI_CM
GND
AGND
VREG
INPUT_C
INPUT_D
FREQ_ADJ
OSC_IO+
OSC_IO-
SD
OTW
READY
M1
M2
M3
GVDD_AB
BST_A
PVDD_A
OUT_A
GND_A
GND_B
OUT_B
PVDD_B
BST_B
BST_C
PVDD_C
OUT_C
GND_C
GND_D
OUT_D
PVDD_D
BST_D
GVDD_CD
J1 CH1
J8 CH2
J4 RJ141V
SW1 Encoder
SW2 Encoder
SW3 Encoder
SW4 Encoder
U2 AD8137
U3 AD8137
J2 OUT1+
J5 OUT1-
J6 OUT2+
J9 OUT2-
J3 CON2
J7 CON2
J11 CON4
J12 Universal PWRSCKT
J15 Installation Hole
J16 Installation Hole
J17 Installation Hole
J18 Installation Hole
U7 Heatsink
J14 Copper Foil
U4 LM317EMP/SOT-223
J13 FAN
Q1 AO3400\SOT-23
D2 LED/R
D1 SS14
U5 TL2575HV-ADJ/TO-263
D3 SS14
U6 LM317EMP/SOT-223
D4 LED/G
Title
2 X 300Watt Class-D Audio Amplifier Board - TAS5630
Size Custom
Document Number
AA-AB32191V100 by Sure Electronics
Rev V100
Date: Friday, December 02, 2011
Sheet 1 of 1