PEC12R-4215F-S0024 (PEC11R-4015K-S0024)

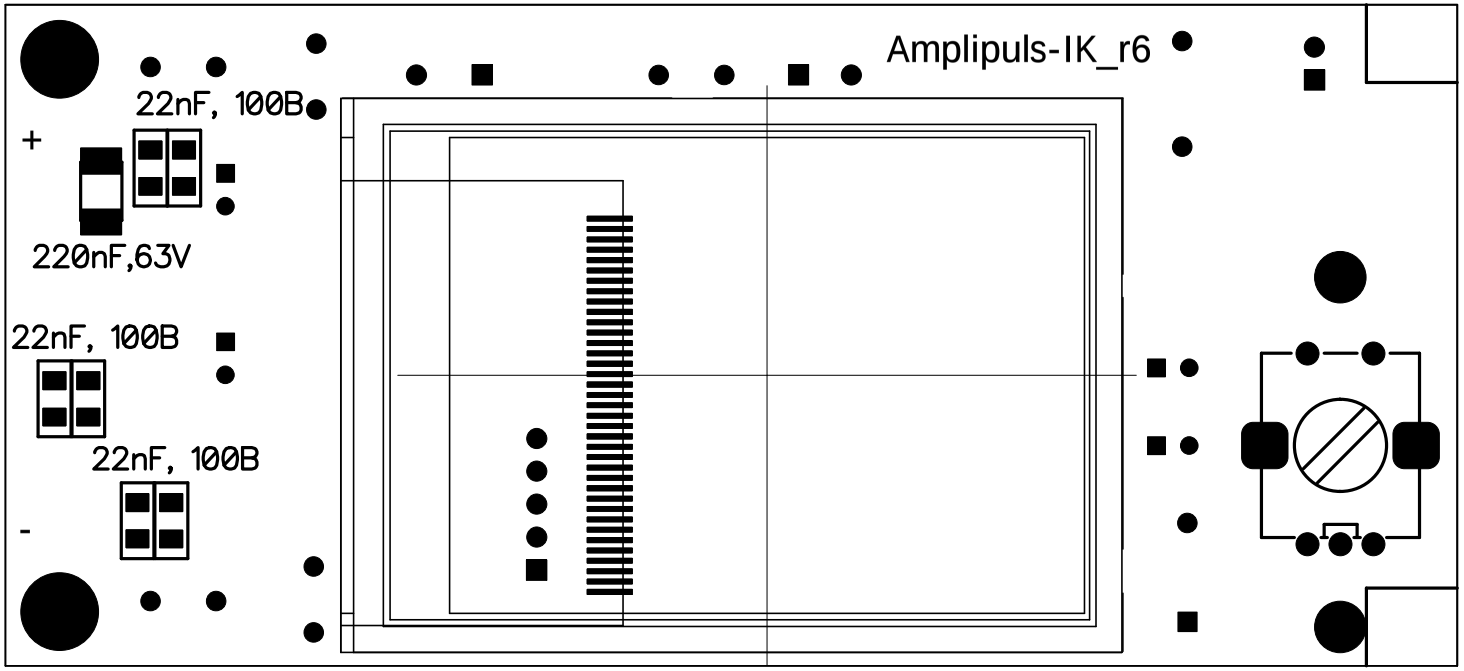

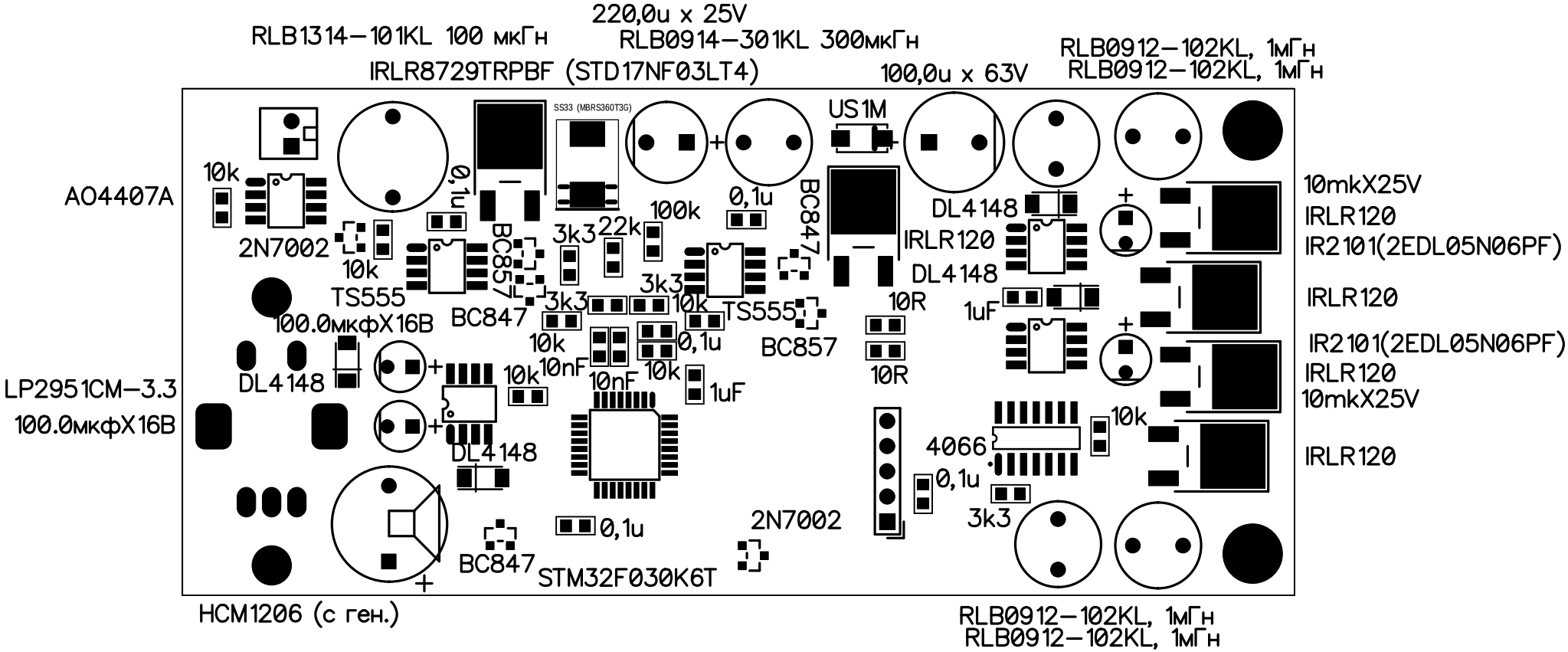
220,0u x 25V
RLB1314-101KL 100 мкГн
RLB0914-301KL 300мкГн
RLB0912-102KL, 1мГн
RLB0912-102KL, 1мГн
IRLR8729TRPBF (STD17NF03LT4)
100,0u x 63V
SS33 (MBRS360T3G)
US1M
AO4407A
10k
0,1u
0,1u
100k
BC847
DL4148
10mkX25V
IRLR120
IR2101(2EDL05N06PF)
2N7002
10k
3k3
22k
IRLR120
DL4148
TS555
BC847
3k3
3k3
10k
TS555
10R
1uF
IRLR120
100.0мкфX16B
BC847
10k
0,1u
BC857
IR2101(2EDL05N06PF)
LP2951CM-3.3
DL4148
10k
10nF
10nF
10k
1uF
10R
IRLR120
10mkX25V
100.0мкфX16B
DL4148
10k
4066
IRLR120
0,1u
3k3
0,1u
2N7002
BC847
STM32F030K6T
HCM1206 (с ген.)
RLB0912-102KL, 1мГн
RLB0912-102KL, 1мГн

Amplipulse 1K_r6
+
-

+
−
+
−
4–8V
a_bivo@list.ru